Anit Radiator

Anit Global Ltd.

UK Head office and Showroom: Unit 2, Finchley Industrial Centre 879 High Road, London, N12 8QA

Mobile: (+44)-7593649009
WhatsApp: (+44)-7383863826
Email: sales@radiator-co.com
Website: www.radiator-co.uk

radiator.co
Anit Radiator
Anit Radiator

Quality of Life

Anit is the manufacturer of vast range of High Efficient Luxury Domestic Aluminium Radiators and Towel Rails. Also, we offer Electric energy efficient radiators and towel rails in different designs and finishes suitable for every room in any design and style.
As a result of a couple of years of research, we are producing high efficient radiators with low water content which will allow for maximum comfort at low running cost for your central heating system.
All of our radiators are designed and produced under rigorous standards and direct observation of special representative of Energy Globe and expert international engineers.
Anit's radiators produced by extrusion technology which could create more value added to our final products. They are very light weight and as the Aluminium has incredible heat conducting properties, our radiators have the advantage of being able to provide heat quickly and it is the best choice to work with Heat Pumps and Solar Panels.
Our mission is to design, manufacture, and distribute heating systems that are characterized by innovation, high efficiency, reliability, low running costs, unbeatable heat output and respect for the environment.

ISO9001- ISO18001 - ISO14001- 2015

Victoria

Technical Data of Each Column

Model :Victoria

Air Flow Channels	Surface Area (m2)	Water Capacity (Litre)	Thickness of Wet Section(mm)	Material	Length (mm)	Width (mm)
2	0.3	0.2	2	Aluminium 6063	110	55

Height (mm)	Length (mm)	Number of column	Thermal Output (Btu/hr) Per Panel ΔT50
500	495	9	3.357
	770	14	5.222
	990	18	6.714
	121	22	8.206

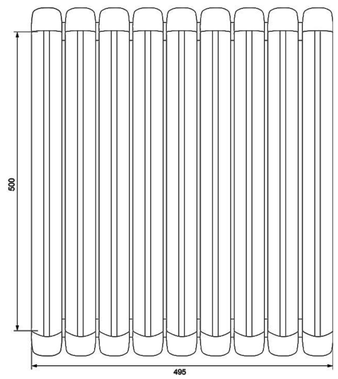

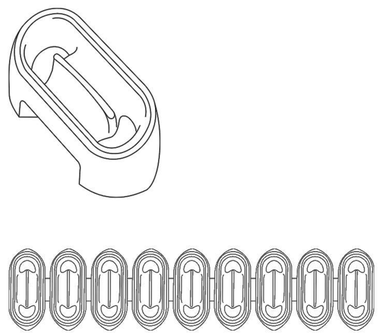

Pioneer Plus

Technical Data of Each Column

Model : Pioneer ○ ● ●

Air Flow Channels	Surface Area (m^2)	Water Capacity (Litre)	Thickness of Wet Section(mm)	Material	Length (mm)	Width (mm)
2	0.5	0.2	2	Aluminium 6063	85	65

Height (mm)	Length (mm)	Number of Columns	Thermal Output (Btu/hr) Per Panel
500	490	7	3087
	770	11	4851
	980	14	6174
	1190	17	7497
	1330	19	8379

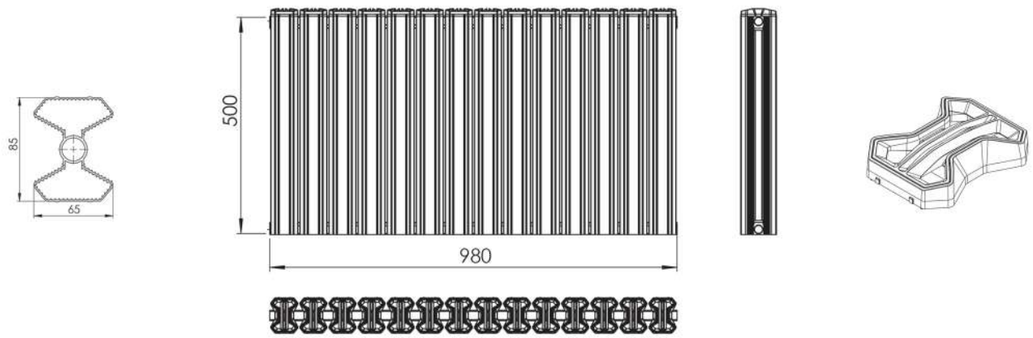

Technical Data of Each Column

Model : Onyx

Air Flow Channels	Surface Area (m^2)	Water Capacity (Litre)	Thickness of Wet Section(mm)	Material	Length (mm)	Width (mm)
2	0.4	0.2	2	Aluminium 6063	85	65

Height (mm)	Length (mm)	Number of Columns	Thermal Output (Btu/hr) Per Panel
500	490	7	2681
	770	11	4213
	980	14	5362
	1190	17	6511
	1330	19	7277

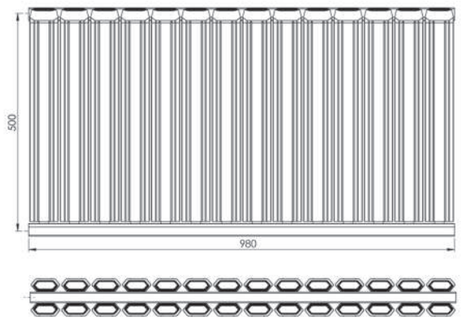

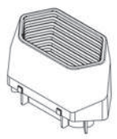

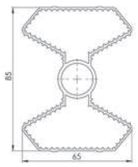

Super-Luxe

Technical Data of Each Column

Model : Super-Luxe ○

Air Flow Channels	Surface Area (m^2)	Water Capacity (Litre)	Thickness of Wet Section(mm)	Material	Length (mm)	Width (mm)
2	0.4	0.2	2	Aluminium 6063	85	65

Height (mm)	Length (mm)	Number of Columns	Thermal Output (Btu/hr) Per Panel
500	800	11	3806
	1000	14	4844
	1200	17	5882

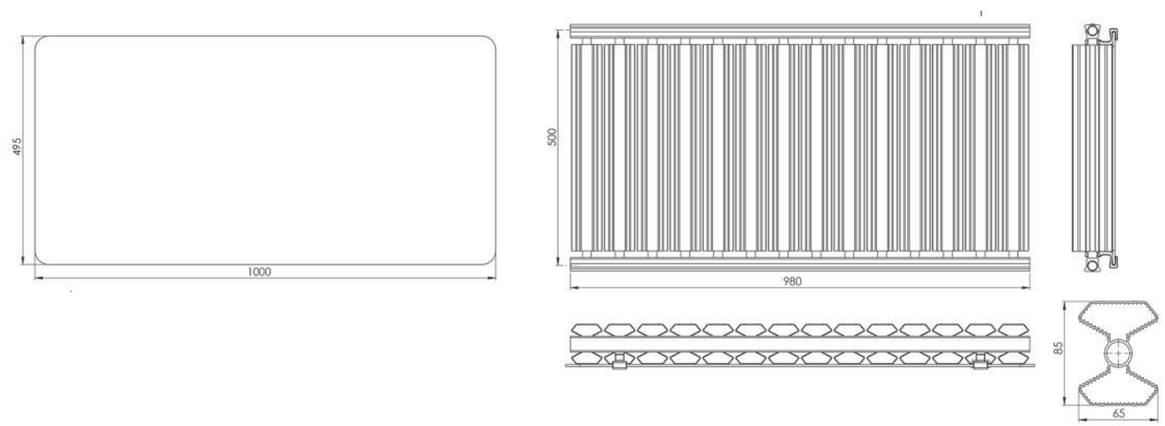

Victoria Vertical

Technical Data of Each Column

Model :Victoria Vertical

Air Flow Channels	Surface Area (m2)	Water Capacity (Litre)	Thickness of Wet Section(mm)	Material	Length (mm)	Width (mm)
2	0.9	0.6	2	Aluminium 6063	110	55

Height (mm)	Length (mm)	Number of column	Thermal Output (Btu/hr) Per Panel ΔT50
1500	440	8	8.952

Vertical

Technical Data of Each Column

Model : Vertical ○ ● ●

Air Flow Channels	Surface Area (m^2)	Water Capacity (Litre)	Thickness of Wet Section(mm)	Material	Length (mm)	Width (mm)
2	1.3	0.6	2	Aluminium 6063	85	65

Height (mm)	Length (mm)	Number of Columns	Thermal Output (Btu/hr) Per Panel
1500	490	7	8750

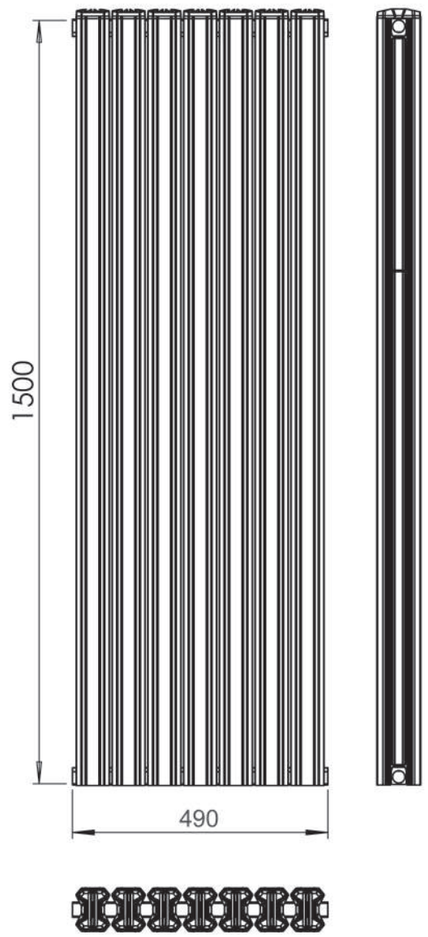

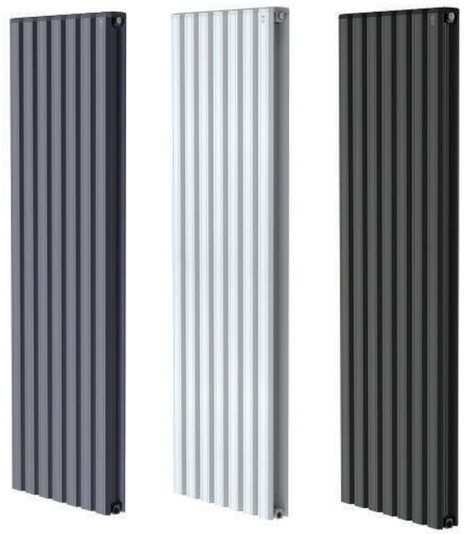

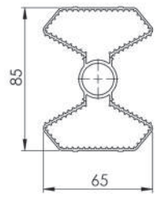

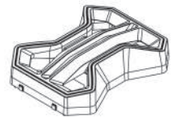

Decorative

Technical Data of Each Column

Model : Decorative ○

Air Flow Channels	Surface Area (m^2)	Water Capacity (Litre)	Thickness of Wet Section(mm)	Material	Length (mm)	Width (mm)
2	1.2	0.6	2	Aluminium 6063	85	65

Height (mm)	Length (mm)	Number of Columns	Thermal Output (Btu/hr) Per Panel
1500	490	7	7875

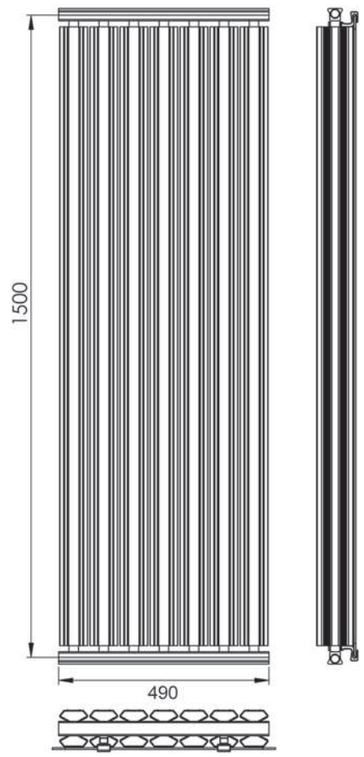

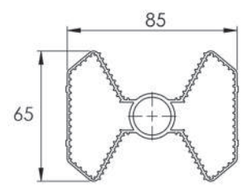

- Customized Design and Colour
- Covered with 5mm Safety Glass
- High Thermal Output
- Unique and Stylish

Technical Data of Each Column

Model : Venice Vertical ● ○

Air Flow Channels	Surface Area (m^2)	Water Capacity (Litre)	Thickness of Wet Section(mm)	Material	Length (mm)	Width (mm)
1	0.6	0.36	1.7	Aluminium 6063	45	50

Height (mm)	Length (mm)	Number of Columns	Thermal Output (Btu/hr) Per Panel
1500	450	9	5550

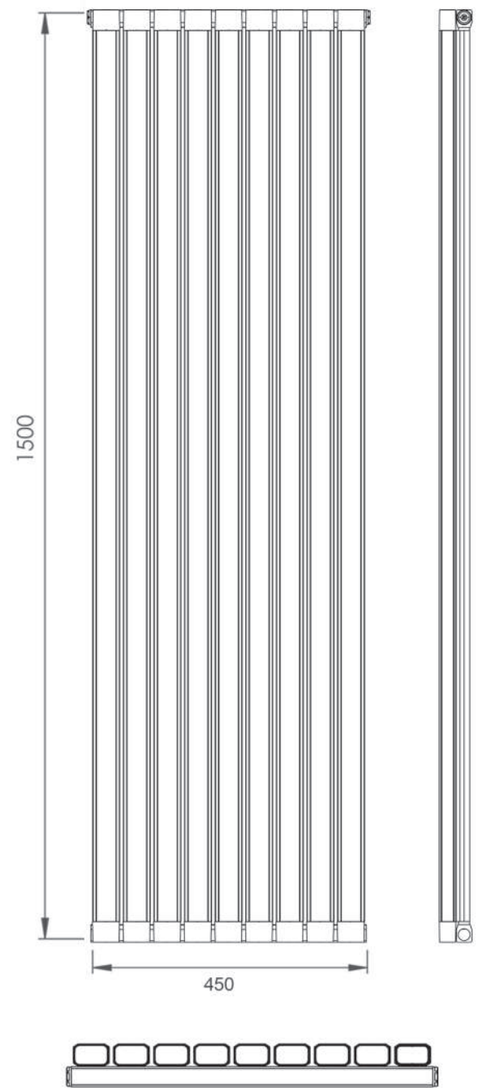

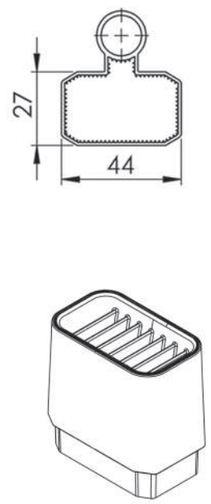

Victoria Towel Rail

Technical Data of Each Column

Model :Victoria Towel Rail

Air Flow Channels	Surface Area (m2)	Water Capacity (Litre)	Thickness of Wet Section(mm)	Material	Length (mm)	Width (mm)
2	0.9	0.6	2	Aluminium 6063	110	55

Height (mm)	Length (mm)	Number of column	Thermal Output (Btu/hr) Per Panel ΔT50
1500	220	4	4.476

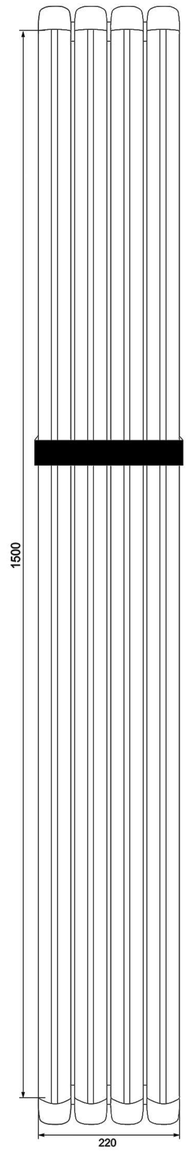

Milano-Towel Rail

Technical Data of Each Column

Model : Milano-Towel Rail

Air Flow Channels	Surface Area (m^2)	Water Capacity (Litre)	Thickness of Wet Section(mm)	Material	Length (mm)	Width (mm)
1	0.19	0.12	1.7	Aluminium 6063	40	10

Height (mm)	Length (mm)	Number of Columns	Thermal Output (Btu/hr) Per Panel
480	500	6	480
600		8	640
780		10	800
900		12	960

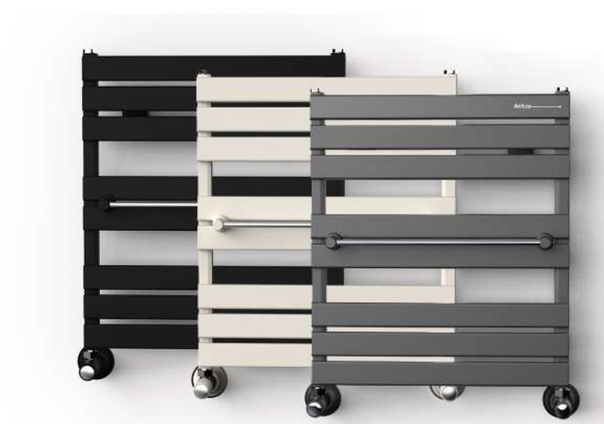

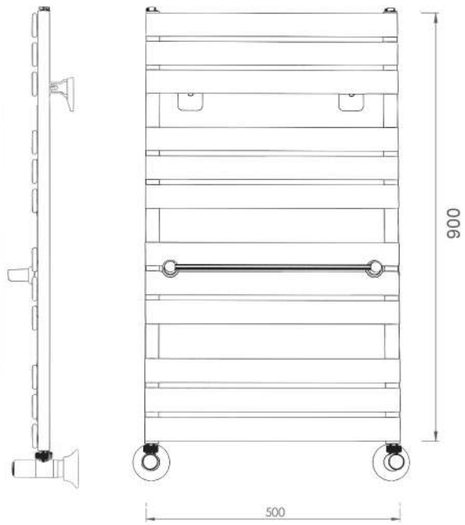

Venice-Towel Rail

Technical Data of Each Column

Model : Venice-Towel Rail

Air Flow Channels	Surface Area (m^2)	Water Capacity (Litre)	Thickness of Wet Section(mm)	Material	Length (mm)	Width (mm)
1	0.2	0.12	1.7	Aluminium 6063	45	50

Height (mm)	Length (mm)	Number of Columns	Thermal Output (Btu/hr) Per Panel
550	500	6	1415
775		8	1887
1000		10	2359

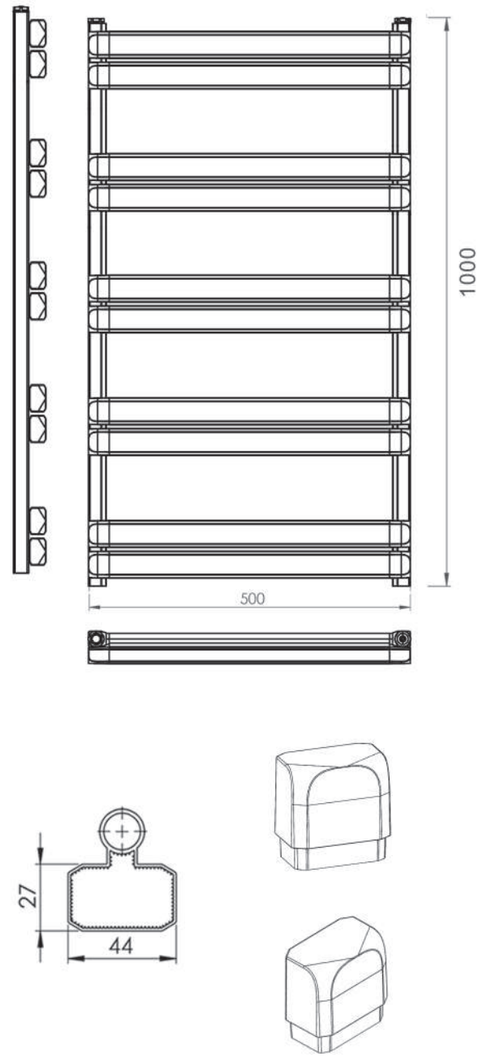

Super-Luxe Towel Rail

Technical Data of Each Column

Model : Super-Luxe Towel Rail ○

Air Flow Channels	Surface Area (m²)	Water Capacity (Litre)	Thickness of Wet Section(mm)	Material	Length (mm)	Width (mm)
1	0.2	0.12	1.7	Aluminium 6063	45	50

Height (mm)	Length (mm)	Number of Columns	Thermal Output (Btu/hr) Per Panel
775	500	8	1887
1000		10	2359

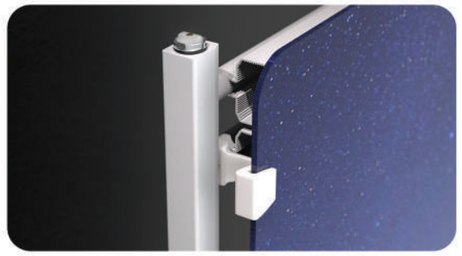

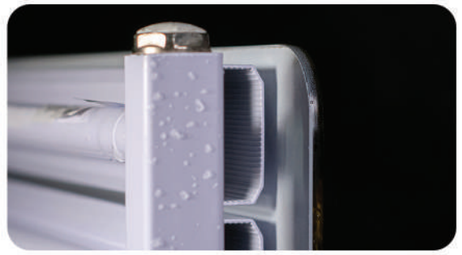

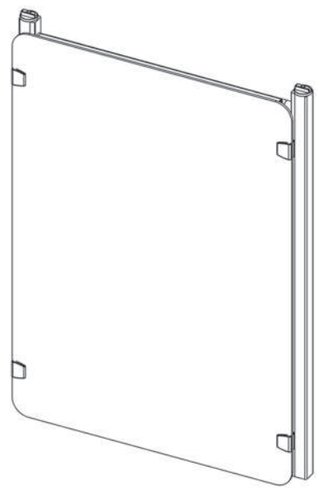

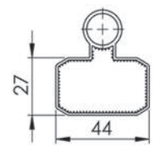

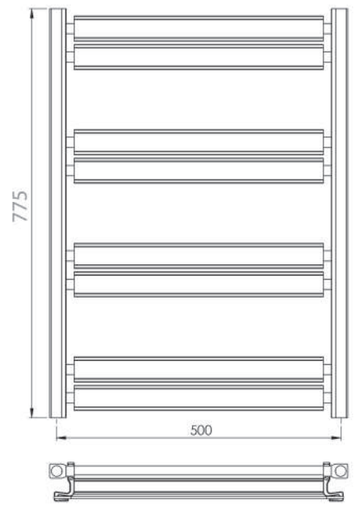

Smart Electric Radiator

- Child Lock
- Low Energy Consumption
- Smart Control Via Application
- Smart Open Window Detection

Technical Data of Each Column

Model : Smart Electric Radiator - Wifi

Air Flow Channels	Surface Area (m^2)	Water Capacity (Litre)	Thickness of Wet Section(mm)	Material	Length (mm)	Width (mm)
2	0.5	0.2	2	Aluminium 6063	85	65

Height (mm)	Length (mm)	Number of Columns	Thermal Output (Btu/hr) Per Panel	Wattages (W)
500	770	11	4851	800
	980	14	6174	1000

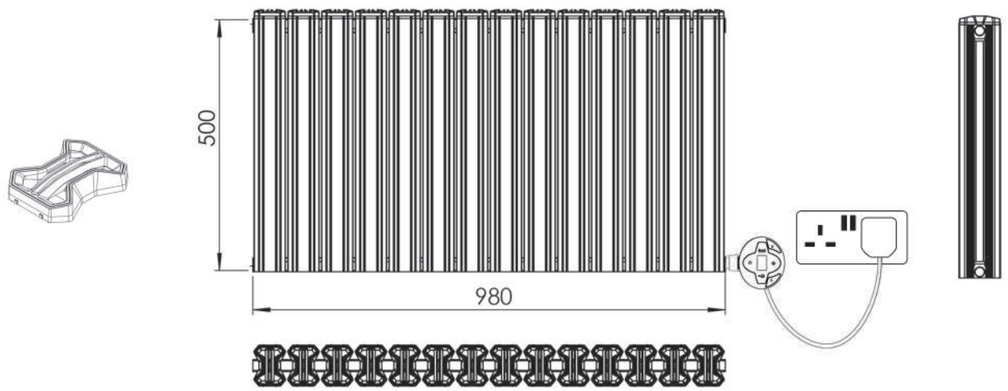

Smart Electric Towel Rail

Technical Data of Each Column

Model : Smart Electric Towel Rail - Wifi

Air Flow Channels	Surface Area (m^2)	Water Capacity (Litre)	Thickness of Wet Section(mm)	Material	Length (mm)	Width (mm)
1	0.2	0.12	1.7	Aluminium 6063	45	50

Height (mm)	Length (mm)	Number of Columns	Thermal Output (Btu/hr) Per Panel	Wattage (W)
1000	500	10	2359	400

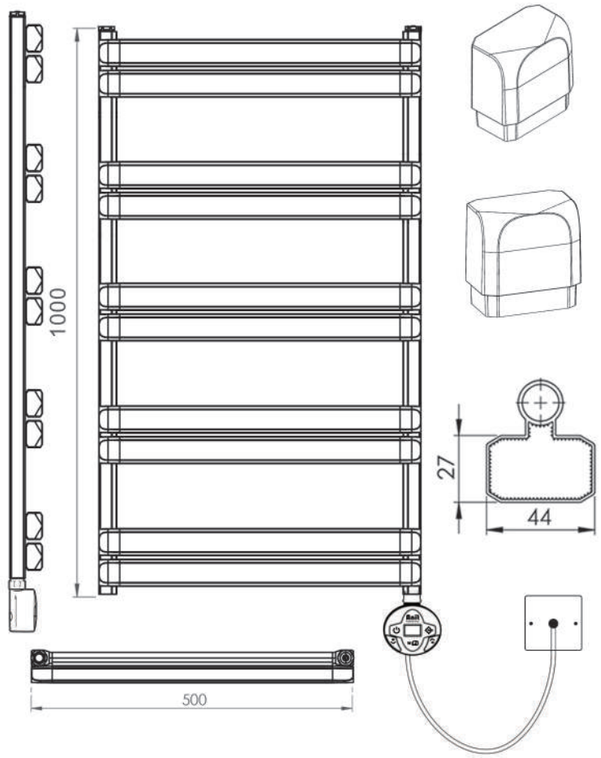

- Child Lock
- Low Energy Consumption
- Smart Control Via Application
- Smart Open Window Detection

TECHNOLOGIES

A++ Efficiency (394 C/hr)

Never let it be said that good design is at the expense of efficiency! Anit Radiator proves that you can retain stunning designer looks whilst maximizing output.

As energy bills rise, finding efficient and effective ways of heating a space is becoming increasingly important.

Anit produce highest energy efficient radiators in the market. Our products are designed to provide maximum amounts of heat from the smallest amount of energy. Anit radiators heat up much quicker whilst using less water, equaling a more cost effective, energy efficient and eco-friendly radiator.

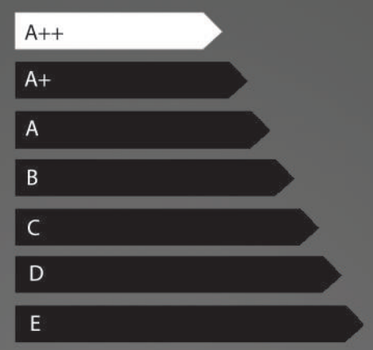

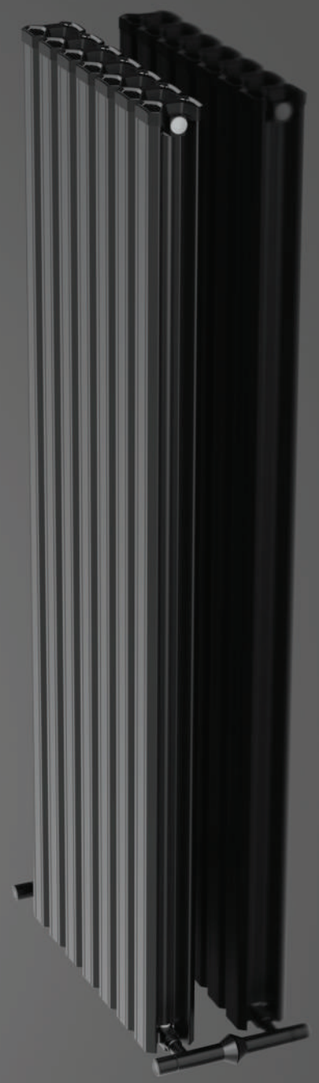

High Resistance to Excess Pressure up to 120 bar

1. Using high length CNC Fittings.
2. Using pure aluminium that has high strength property and this fact effect on the flexibility of radiator to work under high pressure.
3. Using friction welding technology and high pressure press at the assembling section.
4. In addition, using integrated materials at all sections such as collector, columns and fittings could increase the resistance to excess pressure.

Micro Fin Technology

In order to maximize the thermal output of radiator, our R&D department developed a technology called "Micro Fin" that could increase the surface area of each column.

The larger the surface area, the higher the potential heat output. Surface area will be greatly increased by fins and the special shape of columns.

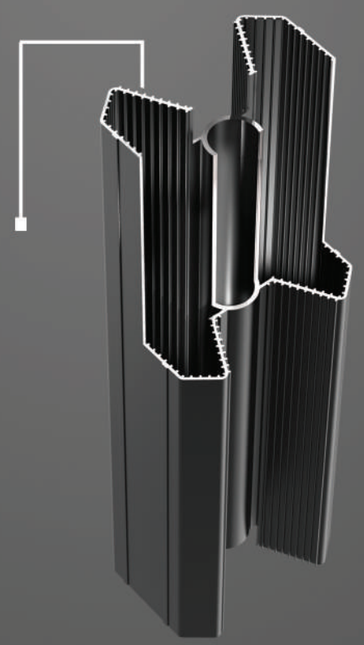

Anit Radiator is a Brilliant Choice to be used with Heat Pumps and Solar Panels

Anit has developed several features that made our product compatible to work efficiently with Heat Pumps and Solar Panels:

1. Low Temperature Radiator: All Anit Radiators could generate high thermal output even with low temperature input water.
2. Fast Response Radiator: Our radiators are made from 99.97 % Pure Aluminium and because of this reason they respond quickly to the temperature. It means they heat up quickly and transmit their heat into the room much more rapidly than steel or cast iron radiators.
3. Low H_2O (Low Water Content) Radiator: Anit Radiator has very high ratio of thermal output-to-water content. It means our radiators need small amount of hot water to be supplied by the source to generate maximum heat output.

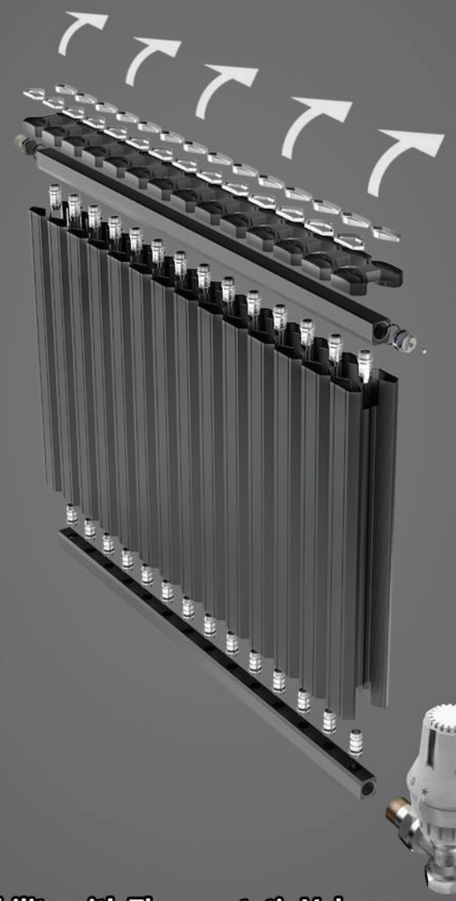

Highest Compatibility with Thermostatic Valves

The thermostatic valves are widely used now to control the gas consumption, but one of the main condition for using this technology is the compatibility rate of the radiator. The low rate of reaction time of steel and die-casting radiators reduce the efficiency of the thermostatic valves and it is not beneficial to use them.

Anit developed a technology at its research and development department to increase the reaction time of the radiator in order to maximize the efficiency of the thermostatic valves, fortunately our product have the highest compatibility with thermostatic valves.

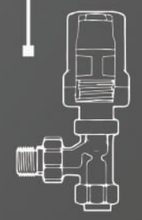

Global Heating Brand

Products developed by Anit are sold all over the world:

United Kingdom
Italy
Greece
Sweden
Finland
Russia
Belarus
Turkey
Armenia
Tajikistan
Turkmenistan
Georgia
Kazakhstan
Pakistan
Iran